CHAPTER 4: PARKING STANDARDS

Contents

Sections		Page #
4.0	OVERVIEW	4
4.1	PARKING RATES	5
4.1.1	Parking Rates for Residential Dwelling Units	5
4.1.2	Parking Rates for Retirement Communities	7
4.1.3	Parking for Neighborhood Commercial and Business Uses	8
4.2	ON-STREET PARKING	9
4.3	OFF-STREET PARKING	9
4.3.1	Parking for Single Family Dwellings on Individual Lots	9
4.3.2	Common Parking Lots	10
4.3.2.1	Location	11
4.3.2.2	Geometric Elements	11
4.3.2.3	Landscaping	16
4.3.2.4	Tree Preservation	18
4.3.2.5	Signage	19
4.3.2.6	Pavement Section	19
4.3.2.7	Lot Driveway Entrance	21
4.3.2.8	Accessibility	21
4.4	SHARED PARKING	23
REFERENCES		24

List of Graphics

Figures		Page #
Figure 4.1.	Parking Lot Located at the Rear of Building	11
Figure 4.2.	Parking Stall and Access Isle Geometry	12
Figure 4.3.	Typical End-Island Design for 90 Degree Parking	
	(a) End-Island for Occasional Use Lots	13
	(b) End-Island for Constant Use Lots	13
Figure 4.4.	Typical End-Island Design for 60 Degree Parking	
	(a) End Section for Occasional Use Lots	13
	(b) End-Island for Constant Use Lot	13
Figure 4.5	Landscape Strip and Islands	15
Figure 4.6.	Parking Lot Pavement Layer Thickness Specifications	21

Illustrations		Page #
Illustration 4-a.	Off-street parking lot for multifamily residences	4
Illustration 4-b.	On-street parking with pavers	4
Illustration 4-c.	Landscape Island Access Walkway	
	(a) trampled vegetation	13
	(b) paved access walkway	13
Illustration 4-d.	Small radius end-island causing car to swing into opposing lane	14
Illustration 4-e.	Parking strip in small parking lot	15
Illustration 4-f.	Internal landscape island in parking lot	15
Illustration 4-g.	Minimum size for planting islands	16
Illustration 4-h.	Bio-Swale in parking lot island	17
Illustration 4-i.	Screen parking view from streets	18
Illustration 4-j.	Trees preserved in parking lot	19
Illustration 4-k.	Stop sign at internal parking lot circulation	19

Commentary

Illustration 4-a. Off-street Parking Lot for Multi-Family Residences

Multifamily residences are adjacent to and above neighborhood-serving businesses at the Orenco Station community in Oregon. Here, rear-access garages and a small well-landscaped parking lot are tucked in behind the buildings.

Illustration 4-b. On-street Parking with Pavers

On-street parking can be made to feel less like a large road through the use of pavers at the parking spaces. These pavers might also be used as a pervious surface for stormwater management purposes. This street is at Reston Town Centre in Virginia.

Recommended Standards

4.0 OVERVIEW

Adequate parking shall be provided for all dwellings and neighborhood commercial uses included within residential and mixed-use developments. Adequate parking includes parking to accommodate residents, visitors, and service vehicles for all residential dwellings, and sufficient spaces to provide convenient access to neighborhood commercial and business uses. On-street and off-street parking are both acceptable means of meeting this requirement. Details regarding on-street parking are provided in section 2.3.2 and throughout chapter 2 as related to each different street type.

It is recognized that adequate parking is necessary for all private and public facilities. Providing excessive parking, however, not only drives up initial development costs (and the associated cost of housing and other items to consumers), it also unnecessarily increases maintenance costs associated with both on-street and off-street parking areas. It also produces unnecessary environmental impacts related to the excess impervious surface area. These environmental impacts translate into additional costs for stormwater impact mitigation. Responsible design of parking facilities must consider the specific conditions and context of the parking needs within a community, and how the parking needs can best be served while minimizing construction and maintenance costs, and environmental impacts. Responsible design also considers how parking components, such as landscaped islands, might be designed to also serve a stormwater management function. Shared parking for complimentary uses and creative, minimal impact, over-flow parking for occasional uses shall always be considered as alternatives to excessive hardscaped parking areas.

Recommended Standards

4.1 PARKING RATES

4.1.1 Parking Rates for Residential Dwelling Units

Parking for residential developments shall be computed by summing the parking needed for the residents of each dwelling unit plus the parking requirements for visitors, service, and emergency vehicles.

Parking for residents of individual dwelling units shall be computed as specified in Table 4-1.

Table 4-1. Parking for Residential Dwellings

Housing Unit Type / Size	Parking Spaces (per dwelling unit)
Single-Family Detached	2.0
Townhouse, Duplex, Quad	1.7
Apartments / Condos	
3 or more bedrooms	1.4
1 or 2 bedrooms	1.2
Efficiency	1.0

(1) Rates independent of ownership

Source: McCourt, Ref. 1

Commentary

Parking standards are often provided in a Municipal Zoning Ordinance. Where this is the case, zoning ordinance parking standards should be revised to be consistent with those presented in this section.

The parking standards in Table 4-1 are based on data reported by the Institute of Transportation Engineers (Ref. 1). Reference 1 is the most comprehensive compilation of parking data available at this writing. Individual values reported in Table 4-1 are based on the following data:

Single-Family Detached: Parking rate based on 6 studies on a suburban site in Glendale, California in 1978, and a Portland, Oregon study relating household ownership with vehicle ownership using 2000 Census data.

Townhouse, Duplex, Quad: Parking rates based on studies at 5 townhouse study sites in urban / suburban areas of California and New Jersey between 1981 and 2000. All studies on owner-occupied units. Average development size was 120 units. Since no study data are available for duplex and quad units, those numbers were extrapolated from the above noted studies.

Apartments / Condos: Parking rates based on data from over 44 studies at mostly suburban sites in 7 different states. One study site was in Devon, PA. Most of the studies were conducted between 1980 and 2000. Some study data from the 1960s were also used. The values reported are from the low-/mid-rise apartment land use classification (less than 5 stories in height). Several sites provided data that correlated parking demand with number of bedrooms. Values reported are an interpretation of the data reported.

Commentary

With the exception of the data for single-family detached dwellings, the parking data reported in Table 4-1 did not differentiate between vehicles owned by residents or visitors. Therefore, the parking rates for other than single-family detached dwellings are conservative since they may include some visitor parking.

Reference 1 presents the range of parking demand data observed from study sites, as well as the 33rd and 88th percentile values for each land use classification. Some data also demonstrate a correlation between parking demand rates in urban vs. suburban areas. The values reported here reflect suburban parking demands. Parking needs might be less in more urbanized areas with access to public transportation.

Reference 1 should be consulted for more information on specific parking data. Data from local parking studies may be used to supersede the average values reported here. In some cases, less parking may be appropriate (for example, age-restricted senior living communities). In other cases, more parking may be required (for example, student housing complexes).

Reference 1 also provides information on how to conduct a scientific parking study.

Reference 4 was the only document found that reported spillover parking values. This reference acknowledges that the values reported are intuitive, and that spillover parking needs would reasonably vary based on community and dwelling unit character.

The spillover parking values reported in Table 4-2 are based on the following:

Single-Family Detached: Value from Reference 4.

Townhouse, Duplex, Quad: Reference 4 specified a value of 1.0 for townhouses. This value was

Recommended Standards

Parking for visitors, service vehicles, emergency vehicles, and others is referred to as spillover parking. Spillover parking rates for residential dwellings are specified in Table 4-2.

Table 4-2. Spillover Parking for Residential Dwellings

Housing Type	Spillover Parking Spaces
Single-Family Detached	1.5 spaces per dwelling unit
Townhouse, Duplex, Quad	0.25 spaces per dwelling unit
Apartment	0.2 spaces per bedroom *

* Efficiency apartments count as 1 bedroom.

Recommended Standards

4.1.2 Parking Rates for Retirement Communities

Parking for retirement communities and facilities shall be allocated as outlined in Table 4-3. The retirement community classifications identified in Table 4-3 are defined as follows.

Congregate Care: Independent living with centralized amenities including dining, house keeping, and social/recreational activities. Limited medical services may or may not be provided. Residents live in separate apartments.

Assisted Living: Complexes that provide routine oversight or assistance with activities necessary for independent living. Separate living quarters for residents. Services include dining, housekeeping, and social/recreational activities. Medical administration and transportation services may also be provided. Skilled medical services are not required by residents. Residents live in separate apartments. Assisted living bridges the gap between congregate care / independent living and nursing homes.

Convalescent / Nursing Home: Facilities that provide care for persons who are not able to care for themselves.

Continuing Care: Facilities that provide multiple elements of senior living. Complexes may include multiple levels of senior living and care, including independent living, congregate care, assisted living, and convalescent facilities. Independent living housing may include detached or attached single-family units or apartments.

Senior living communities that do not meet one of the retirement facility classifications identified above shall provide parking in accordance with the rates in Table 4-1.

Commentary

reduced to 0.25 since the base parking rate in Table 4-1 includes some spillover parking.

Apartment: Reference 4 specifies 0.5 for all apartments. This value was reduced to 0.2 per bedroom since the base parking rate may include some spillover and it is intuitive to assume that the larger the apartment, the greater the over-flow demand.

It is recommended that community-specific adjustments be made to spill-over parking rates based on local experience. A reasonably low value should be selected to minimize site imperviousness.

Special consideration is appropriate for the reduced parking requirements within retirement communities.

Commentary

The data in Table 4-3 were compiled from Reference 1. Specific parking rates identified in Table 4-3 are based on the following study data:

Congregate care: Parking rate based on one study in Portand, Oregon (2000).

Assisted Living: Parking rate is based on data from 12 sites in mostly suburban settings in Illinois (1), Virginia (1), California (2), New Jersey (3), and New York (5). All studies were conducted between 1988 and 2002.

The intent of including neighborhood-serving commercial and business uses within residential neighborhoods is to encourage convenient pedestrian access to these facilities. Parking for neighborhood commercial and business uses should take into consideration the estimated percentage of employees and customers who will either walk or ride bicycles to the business. It should always be a goal to minimize parking for neighborhood commercial and business establishments.

On-street parking is permitted for neighborhood commercial and business uses and can be considered as a way to accommodate some of the required parking. Designers should note, however, that when on-street parking is used, additional conflicts among all users of the street are introduced and care should be used in selecting parking placement.

Recommended Standards

Table 4-3. Parking for Retirement Facilities

Housing Unit Type / Size	Parking Spaces (per dwelling unit)
Congregate Care	0.4 per resident
Assisted Living	0.3 per resident
Nursing Home	0.9 per employee
Continuing Care	Use parking rates from Table 4-1 and Table 4-3 for appropriate sections of the continuing care complex.

4.1.3 Parking for Neighborhood Commercial and Business Uses

Parking for neighborhood commercial and business uses shall be computed as follows:

Base parking X (100 – percentage community walk-in business) / 100

Base parking shall be estimated from values in Table 4-4.

Recommended Standards

Table 4-4. Base Parking for Neighborhood Commercial and Business Uses

Business Type	Total Parking Spaces
Office	0.9 per employee
Medical-Dental Clinic	3.5 per 1,000 sq. ft. GFA*
Retail	4.5 per 1,000 sq. ft. GLA**
Convenience Store	3.4 per 1,000 sq. ft. GFA*
Restaurant (no bar / lounge)	0.35 per seat
Restaurant (with bar / lounge)	0.47 per seat
Fast Food (drive-thru)	9.9 per 1,000 sq. ft. GFA*
Fast Food (no drive-thru)	12.4 per 1,000 sq. ft. GFA*
Drugstore	1.8 per 1000 sq. ft. GFA*
Bank, Walk-In	2.5 per 1,000 sq. ft. GFA*
Bank, Drive-In	3.5 per 1,000 sq. ft. GFA*
Church	0.16 per seat

Source: McCourt, Ref. 1.

*GFA = Gross Floor Area
**GLA = Gross Leasable Area

Commentary

Data in Table 4-4 were compiled from Reference 1. Note that the study sites were generally suburban, and access was typically vehicle-dependent. Appropriate adjustment should be made for anticipated walk-in business or where access to public transportation is convenient.

4.2 ON-STREET PARKING

See section 2.3.2 and each different street-type in chapter 2 for on-street parking standards.

On-street parking, off-street parking or a combination of the two are acceptable means of meeting the parking requirements outlined in this chapter.

4.3 OFF-STREET PARKING

Off-street parking includes driveways, carports, garages, and parking lots. Parking on driveways, carports, and garages wholly contained on private lots for single-family dwellings (single-family detached homes, townhomes, and quad or similar units on individual deeded lots) are listed in section 4.3.1. Common parking lots for multifamily dwellings and common parking lots for over-flow parking within other types of developments are listed in section 4.3.3.

While off-street parking can be used to satisfy some of the parking needs, the availability of off-street parking, particularly in high-density developments, will likely be needed to accommodate all anticipated vehicle storage. The use of off-street parking keeps the street clear for snowplowing, emergency vehicles, and delivery vehicles. The selection of on-street versus off-street parking should also consider that off-street parking requires more square-feet of impervious surface per space than on-street spaces, due to egress drives and travel aisle lanes.

4.3.1 Parking for Single-Family Dwellings on Individual Lots

Parking spaces in carports, garages, and driveways on individual lots for single-family

Commentary

The parking bay size in garages and carports is based on a standard space allowed for a vehicle in a typical parking lot. The width has been increased slightly over values specified in Reference 6 to accommodate full-swing opening of car doors for ease of access.

Sixty sq. ft. of storage space provides a 6 ft. by 10 ft. storage / workshop adjacent to the parking spaces. This is considered an adequate garage oversize to provide for typical home-owner uses that might otherwise restrict the use of the parking space. This is simply an intuitive number based on experience.

The reduction in counted parking spaces in garages and carports recognizes that storage and other homeowner uses frequently restrict parking.

The limitation restricting the allocation of parking within the street right-of-way is intended to keep cars from blocking pedestrian access along sidewalks, and from blocking clear site lines along and in the vicinity of the street.

Recommended Standards

dwellings can be counted towards the parking requirement only for the dwelling on the lot and its spillover.

Minimum dimensions for off-street parking spaces on individual lots shall be as follows.

a. *Garages and Carports*: Parking bays in garages and carports shall be at least 18-feet long and 10-feet wide. These spaces shall be centered on garage doors to provide convenient and unobstructed ingress and egress.

Garages and carports having a minimum storage areas equal or greater than 60 sq. ft. at the rear or side of the carport / garage may count all garage and carport parking towards the parking requirement for that unit.

The allowable number of dimensioned parking spaces in garages and carports that do not meet the storage area requirement indicated above shall be one less than the number of dimensioned spaces.

b. *Driveways to Single-Family Residences*: Parking spaces along driveways to single-family residences can be stacked (one behind another and side to side), and shall be at least 20-feet long by 8-feet wide. These parking spaces do not need to be striped. Only on-lot driveway area can be counted towards the parking requirement for residential driveways accessing residential access streets or streets of higher classification. Driveway area to within 3 feet of the edge-of-pavement can be allocated to parking space for residential driveways accessing alleys. A drive isle does not have to be maintained when considering spaces in driveways.

4.3.2 Common Parking Lots

For multifamily dwellings, parking shall be in common lots in accordance with the standards of this section. This section also applies to parking lots serving neighborhood commercial and business uses, recreation areas within developments, as well as common parking lots for overflow parking within residential neighborhoods necessary to meet the parking space requirements of section 4.1.

Recommended Standards

4.3.2.1 Location

Off-street parking lots shall be located to the side or rear of buildings and shall not be located within the front yard.

Figure 4.1. Parking Lot Located at the Rear of Building
These offices, set within a residential context, have their parking lots located at the rear of their lots. Note that the parking is also screened from the adjacent street by a row of shrubs.

4.3.2.2 Geometric Elements

The geometric elements of parking lot design include parking stall arrangement and size, desired traffic circulation, and island radii, spacing, and configuration. These elements shall be established considering anticipated vehicle loads, turnover rates, vehicle size, and the need for emergency vehicle access.

Stall and Aisle Geometry: Figure 4.1 provides parking space and aisle dimensions for standard and mid-sized vehicles. Alternate geometric standards may be used if justified based on a realistic estimate of the facilities use, and supported through a recognized engineering reference (Reference 1 for example).

Commentary

To reinforce the residential scale and qualities of a neighborhood, building facades should be more prominent along a street. Placing parking in front of a building or store has more of a suburban strip-mall feel, which does not reflect the qualities of a walkable community. Parking placed along the side of a building, particularly for neighborhood commercial uses, will provide adequate adjacencies and access for the buildings users, shoppers, etc.

Parking lot design is a complex mix of various design elements, including

- Site constraints,
- Parking demand,
- Anticipated turnover rate,
- Vehicle size,
- Desire for safe circulation,
- Minimizing impervious area, and
- Meeting landscape needs for aesthetics and shade.

No one design will fit all situations. Each design will be unique and must provide a safe, functional, and environmentally friendly facility. Reference 3 is an excellent reference for parking lot circulation and geometry.

Parking stall dimensions in Table 4-5 are based on

Commentary

a desire to minimize impervious area while maintaining sufficient distance between vehicles All values are based on data presented in Reference 3.

It is noted that off-street angled parking spaces may be designed for either forward or reverse (backward) entry. See further explanations about angled parking in chapter 2, section 2.3.2.

End-islands are an integral part of the design of parking lots. They define the area and geometry of the intersection of a parking aisle and the internal circulation aisles. They provide an element of safety by protecting cars parked at the end of each row and providing a clear visual site distance at the corner.

Recommended Standards

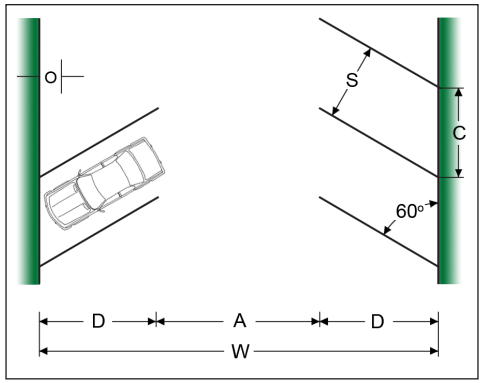

Figure 4.2. Parking Stall and Access Isle Geometry.

Table 4-5. Parking Stall Dimensions

Stall Angle (degrees)	**S** Stall Width (ft.)	**C** Stall Length (ft.)	**D** Stall Depth (ft.)	**O** Front Over-hang (ft.)	**A*** Aisle Width (ft.)	**W** Module Width (ft.)
90	9	9.5	18	3	24	60
60	9.5	11.0	20.5	2.6	16**	57**
45	9.5	13.4	19.5	2.1	14**	53**

* Value modified based on Reference 6.
** Accommodates one-way traffic only. For 2-way traffic, use A = 24 feet and W = 65 feet or 63 feet for 60- and 45-degree angled parking, respectively.

If a sidewalk exists at the curb, the combined width of the curb and sidewalk shall be sufficient to permit a 3-foot unobscured walkway width (i.e., the minimum width of sidewalk plus curb shall be 3 feet plus the dimension “O”). Where curb overhang will not interfere with pedestrian flow or impact adjacent landscaping, the stall depth (dimension “D”) may be reduced by the front overhang (dimension “O”).

End Islands: End islands shall be delineated by raised curbs surrounding a landscaped area. A 2-foot wide paved sidewalk shall be provided behind the curb adjacent to the end parking stall. Figures 4.2 and 4.3 illustrate typical end-island designs for 90-degree and 60-degree parking, respectively. Part (a) of each figure illustrates an end island that can be used in occasional use or low-volume parking lots constructed as spill over lots; Part (b) illustrates the end island that should be used in a constant use lot at multi-family and commercial facilities.

Recommended Standards

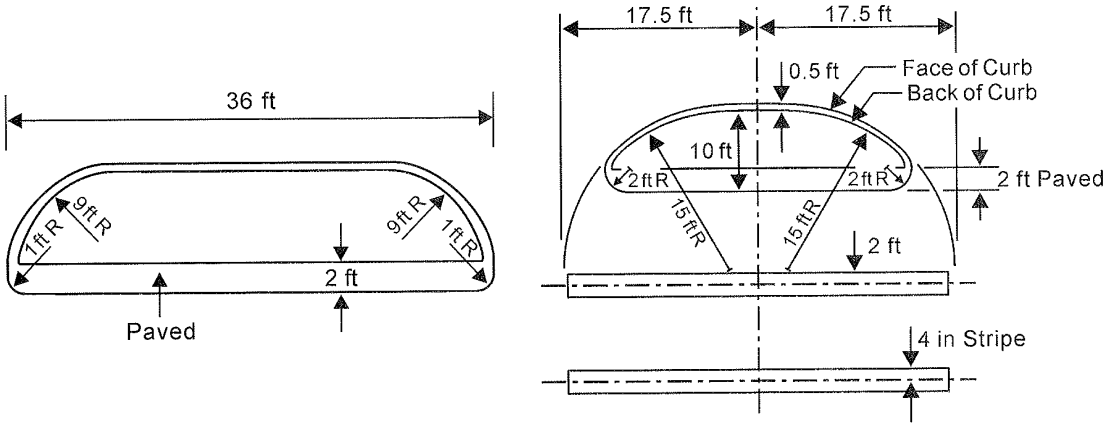

(a) End Section for Occasional Use Lots

(b) End Island for Constant Use Lot

Figure 4.3. Typical End-Island Design for 90 Degree Parking

Source: Stover and Koepke, Ref. 3

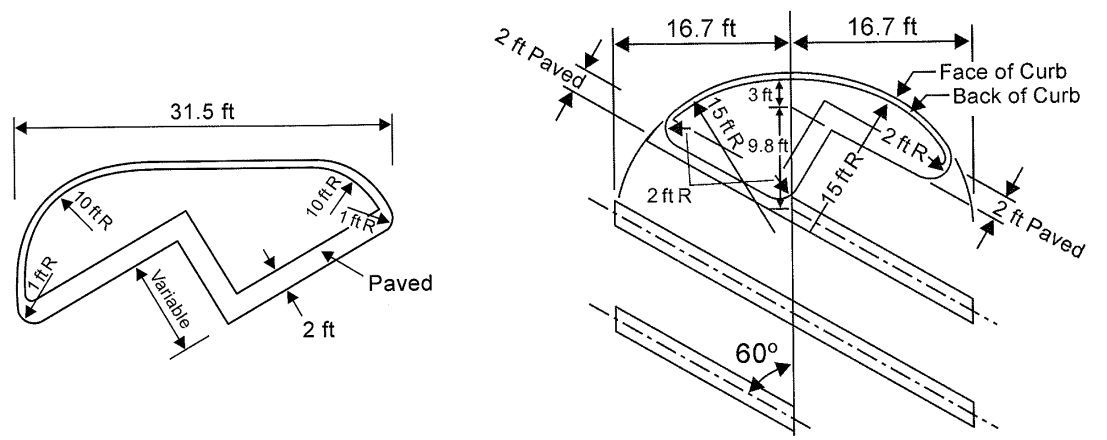

(a) End Section for Occasional Use Lots

(b) End Island for Constant Use Lot

Figure 4.4. Typical End-Island Design for 60-Degree Parking

Source: Stover and Koepke, Ref. 3

Commentary

End-islands can take on a variety of shapes. The end-islands illustrated in Figures 4.3 and 4.4 represent typical designs that accommodate necessary planting areas as well as meet traffic flow needs.

Placing a paved strip along the parked side of the end-island creates a convenient walkway for pedestrians entering or exiting cars on that side and protects landscape plantings in the island. See Illustration 4-c below:

Illustration 4-c. Landscape Island Access Walkway. (a) trampled vegetation; (b) paved access walkway

(a)

(b)

Source: Stover and Koepke, Ref. 3

Commentary

It is noted that the end-islands having corner radii as identified in part (a) of Figures 4.2 and 4.3 may require passenger cars to swing into the opposing lane of traffic when entering the traffic aisle (see Illustration 4-b, below). While this might be acceptable for occasional-use or low-volume lots, it will create traffic flow conflicts in constant-use or higher-volume lots.

While the configuration in part (b) of Figures 4.2 and 4.3 permit the design passenger car to swing into the aisle without encroaching on the opposing lane of traffic, it provides a smaller landscape area and exposes the car parked adjacent to the island. If these considerations become a concern, the island width should be increased from 10 feet to 15 feet.

Illustration 4-d. Small Radius End-island Causing Car to Swing into Opposing Lane

Source: Stover and Koepke, Ref. 3

Landscape strips function to break-up unsafe diagonal movements through large parking lots. They are also esthetic features that serve as locations for parking lot landscaping, and can be used as locations for pole lights and stormwater facilities. Linear planting strips are encouraged rather than numerous small one-tree islands, as that arrangement is better for long-term tree health and is easier for parking lot maintenance, such as snow removal.

Recommended Standards

Ground cover or shrubs that grow higher than 2 feet should be avoided in end islands to maintain clear intersection sight lines.

Landscape Strips: A minimum ten-foot wide continuous planted median shall be installed in off-street parking areas approximately every third parking module as illustrated in Figure 4.5. Other design options may be approved provided that the intent of “breaking up” large areas of parking is met. Saving existing interior trees may be credited toward this requirement.

Recommended Standards

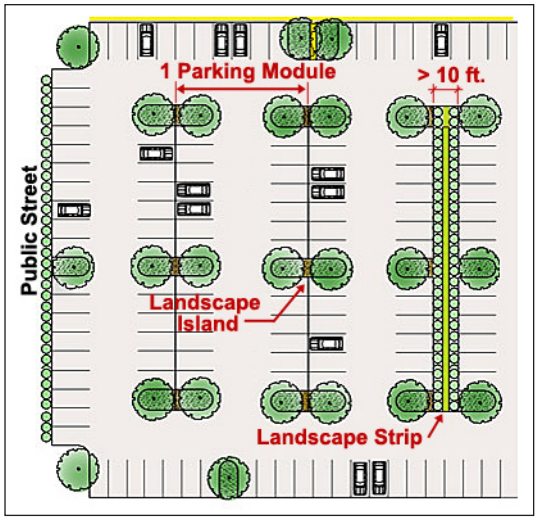

Figure 4.5 Landscape Strip and Islands

Modified from Source: Rockville, SC ordinance, Ref. 6, prepared by the VICgroup

Landscape Islands: Landscape islands may be located as illustrated in Figure 4.4 to reduce the length of parking bays, provide locations for light poles, and facilitate landscaping.

Commentary

Illustration 4-e. Parking Strip in Small Parking Lot

A landscaped central strip is part of a well-landscaped parking lot near a neighborhood-serving commercial area in Bucks County.

Illustration 4-f. Internal Landscape Island in Parking Lot

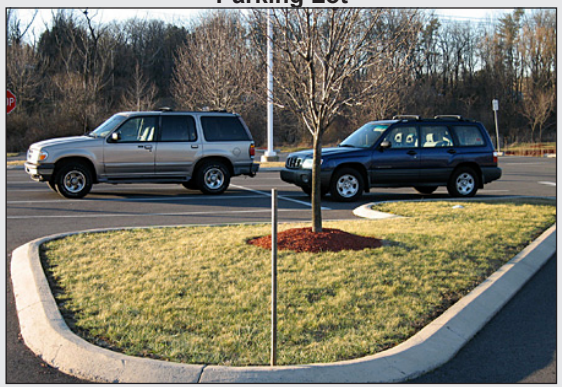

Landscape islands provide green space, can assist with stormwater management and help control the flow of traffic within a parking lot.

Commentary

Illustration 4-g. Minimum size for planting islands

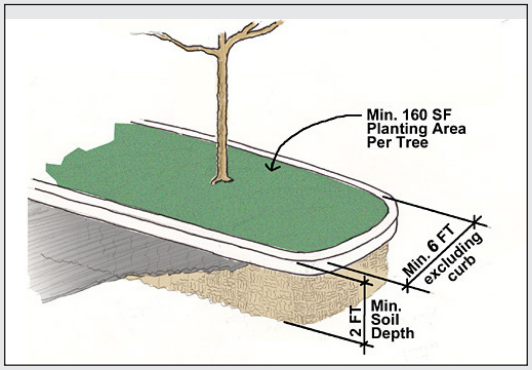

For a tree to grow adequately within a parking lot, the island in which it is planted must be of a certain size. An island shaped like a typical parking space at 9' x 18' would be 162 SF. A square footage dimension is provided so that oddly shaped islands can be accommodated if the parking lot design necessitates it.

Parking lot landscaping not only enhances the aesthetics of a parking area, but it also is intended to provide shade and help reduce the heat island effect of paved parking areas. This is why larger canopy trees are preferred.

Recommended Standards

4.3.2.3 Landscaping

Parking lots larger than 18 spaces and/or 5,500 square feet shall provide at least one shade tree for every nine (9) parking spaces. Lots of this size shall also provide screening along all public street frontages. In addition, the following requirements shall be met:

1. Trees shall be located in internal planting islands or linear strips or along the perimeter of the parking lot.

2. Planting areas shall be no less than 160 square feet per tree with a minimum width of six (6) feet, not counting the curb.

3. Trees planted as a part of parking lot landscaping shall be of a non-columnar, shade-tree variety with an expected height at maturity of at least thirty (30) feet. All trees shall be a minimum of two inches in caliper at the time of installation.

4. The standards for all trees and shrubs, including the minimum height, root ball size, number of branches, and width, shall conform with the *American Standard for Nursery Stock* published by the American Association of Nurserymen for that type of tree or shrub at the time of installation. (Ref. 7)

Recommended Standards

5. Parking lots shall be graded so that landscape islands do not impound water, unless surface impoundment is required as a method of on-site retention of stormwater.

6. Landscape islands should be composed of well-prepared structured soil and thoroughly cultivated and amended so as to support healthy plant growth. Depending on a soil analysis, soil preparation shall require incorporation of 20% - 30% organic matter (composted leaves or other approved product) by volume, tilled to a minimum of 5" (Ref. 8). Adequate drainage, mulching, and irrigation shall be provided for landscape medians and islands.

7. Parking shall be partially screened from the view of public streets by evergreen plantings, fencing, or walls. The height shall be minimum of 3 feet; plantings must attain a height of 3 feet within three years of installation.

Commentary

Illustration 4-h. Bio-Swale in parking lot island

Source: Dr. Stuart Echols, Penn State

By having depressed rather than raised landscape islands and strips, those components of parking lots can provide an additional stormwater management function. Even if the site engineering or subsurface will not enable them to serve infiltration purposes, these areas can still collect and perform the first-flush cleansing before the stormwater runoff enters the system.

For the health and vitality of the plantings, the planting areas must be free of construction debris and the soil compacted during construction must be amended.

To help enhance the residential character of the neighborhood, views of parked cars need to be diminished. The requirements provide an element of safety in that one can still see into the parking lot, but the more prominent view at the street frontage will be that of landscaping, not car grills.

Commentary

Illustration 4-i. Screen parking view from streets

Shown here is a visual simulation that depicts the difference between no screening and a screen consisting of a low fence with planting in front of it.

Site designers are encouraged to retain trees rather than paving over those pervious surfaces, where practical. Offering a small reduction in the number of spaces that need to be provided can serve as an incentive to do this. The amount of reduction can be determined only after taking into consideration any unique site conditions and the impact of the reduction on parking needs for the use. The reduction of parking shall only occur where the trees being protected are within the parking area.

Recommended Standards

4.3.2.4 Tree Preservation

A 5 to 20% reduction in the number of parking spaces required on the site shall be allowed to the extent that the reduction in the amount of required pavement will preserve existing healthy trees in an undisturbed, natural condition. The amount of reduction can be determined only after taking into consideration any unique site conditions and the impact of the reduction on parking needs for the use, and must be agreed upon by both the applicant and the municipal staff.

Recommended Standards

4.3.2.5 Signage

Adequate signage shall be provided to facilitate traffic flow. At a minimum, stop signs shall be provided at locations where parking aisles intersect circulation roadways, and at parking lot access points onto public streets and roadways.

4.3.2.6 Pavement Section

Off-street parking areas and perimeter travel lanes shall be designed with pavement sections as specified in Figure 4.5. As indicated in Figure 4.5, parking lot pavement sections

Commentary

Illustration 4-j. Trees Preserved in Parking Lot

Source: Dr. Stuart Echols, Penn State

The design of this parking lot took into consideration the value of two large, healthy oak trees. The islands were generously sized to accommodate the existing root area of the trees. It would obviously be years before newly planted trees could attain this size and provide equivalent shade and stormwater mitigation benefits.

Illustration 4-k. Stop Sign at Internal Parking Lot Circulation

This sign indicates that the parking lot aisle traffic must stop and yield to any cars traveling in the internal circulation lanes of this parking lot.

Commentary

Light load lots are intended to provide an economical alternative to on-street parking for spillover parking in single-family residential neighborhoods. A typical light-load lot would provide access for up to 250 autos per day plus 10 or less two axle step delivery trucks with single-axle loads less then 6,000 lbs. per week. With the exception of emergency situations, these lots should not be subject to single axle loads in excess of 8,000 lbs. Note that other vehicle load combinations are possible and should be permitted as long as it is demonstrated that the anticipated loads will not exceed 500 ESAL's.

Moderate-load lots are typical of parking lots for multi-family units (townhouses and garden apartments) individually and in combination with neighborhood commercial uses where an alternate means of access (service road, for example) is provided for moving vans and other large delivery vehicles. A typical moderate loading would be 700 or fewer autos per day, 30 or less step delivery trucks per week (2 axles with single axle loads few than 6000 lbs), and 8 or fewer large delivery or service vehicles (3 axles with single axle loads less than 8,000 lbs.) With the exception of emergency situations, these lots should not be subject to single axle loads in excess of 16,000 lbs. Note that other vehicle load combinations are possible and should be permitted as long as it is demonstrated that the anticipated loads will not exceed 1,500 ESAL's

Moderately heavy load lots would be typical of large multi-family developments (townhouses and garden apartments) individually or in combination with neighborhood commercial uses, where an alternate means of access is provided (service road, for example) for moving vans and other semi tractor trailer trucks. A typical moderate loading would be 4000 or fewer autos per day, 60 or fewer step delivery trucks per week (2 axles with single-

Recommended Standards

are a function of anticipated traffic loads. Anticipated traffic loads are defined are as follows.

Light Load Lots: Parking lots subject to 500 or less ESAL's (equivalent 18-kip single axle loads) during a 25-year design period. Small step delivery vehicles having 2 axles with single-axle loads up to 6,000 lbs. may have regular access to these lots. However, these lots are not appropriate for access by tri-axle delivery or other large service vehicles, including moving vans. Construction vehicles shall not access finished surfaces on lots intended for light loads.

Moderate Load Lots: Parking lots subject to 1500 or less ESAL's during a 25-year design period. Step delivery vehicles and service vehicles having 2 axles with single-axle loads up to 8,000 lbs. may have regular access to these lots. However, these lots are not appropriate for larger single-unit service vehicles and semi tractor trailer trucks, including moving vans. Construction vehicles may access the base course pavement on these lots as long as the combined B and C layer structure number is greater than 2.0.

Moderately Heavy Load Lots: Parking lots subject to 6,000 or less ESAL's during a 25-year design period. Step delivery vehicles and service vehicles having single-axle loads up to 16,000 lbs. may have regular access to these lots. However, these lots are not appropriate for regular access by semi tractor trailer trucks, including moving vans. Construction vehicles may access the base course pavement on these lots as long as the combined B and C layer structure number is greater than 2.0.

The approving authority may require computations documenting expected axle loads for parking areas to support the pavement section selected.

Recommended Standards

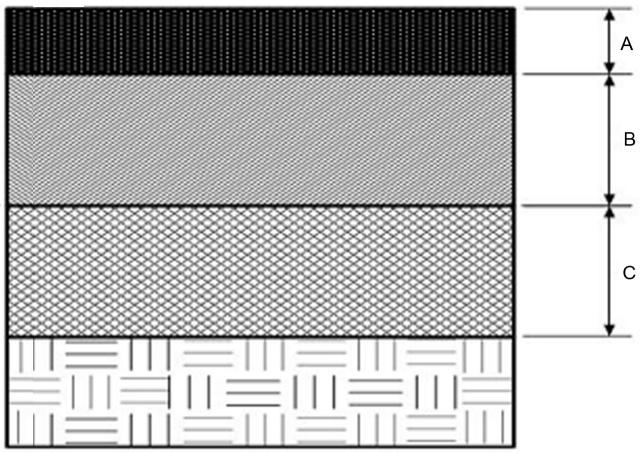

(Not to Scale)

Layer Designation	Layer Description	Light Load	Moderate Load	Moderately Heavy Loads
A	Bituminous Wearing Course	2.5	1.5	1.5
B	Bituminous Concrete Base Course	none	3.0	3.5
C	Granular Base	4.0	4.0	6.0
Minimum Structure Number		1.5	2.0	2.5

Figure 4.6. Parking Lot Pavement Layer Thickness Specifications

4.3.2.7 Lot Driveway Entrance

Parking lot entrances onto all public streets shall be designed in accordance with Pennsylvania State Code, Title 57, Chapter 441, Access to and Occupancy of Highways by Driveways and Local Roads.

4.3.2.8 Accessibility

Common parking lots serving multifamily dwellings, commercial and business uses, and other recreational uses shall provide parking for the physically disabled in accordance with

Commentary

axle loads less than 6000 lbs), and 8 or fewer large delivery or service vehicles (3 axles with single-axle loads less than 16,000 lbs.) Note that other vehicle load combinations are possible and should be permitted as long as it is demonstrated that the anticipated loads will not exceed 6,000 ESAL's.

Commentary

Shared parking is when two or more land uses share the same parking spaces. By taking into account different peak parking demands, shared parking areas reduce the total number of parking spaces required compared with simply adding together the parking requirements of each individual land use. The major benefit of shared parking is a reduction in the land devoted to parking, especially in the amount of paved surface which minimizes stormwater impacts and preserves more land for green space or additional development density.

Land uses often involved in specific shared parking arrangements include offices, restaurants, retail, colleges, churches, cinemas, hotels/motels, and special event situations. Shared parking is often inherent in mixed-use or neighborhood commercial developments that house one or more businesses that are complementary, ancillary, or support other activities. Table 2-a provides an example of peak parking demand periods for various land uses.

Recommended Standards

the requirements of the Americans with Disabilities Act (Public Law 101-336), and local, State, and Federal codes which implement the Act (Ref. 2).

Accessible spaces shall be provided in accordance with Table 4-6 for all off- and on-street parking for multi-family residences and neighborhood commercial uses. Accessible spaces do not need to be provided for single-family dwellings.

Table 4-6. Accessible Parking Space Requirements

Total Spaces for Use	Minimum Van-accessible Spaces Required
1 to 25	1
26 to 50	2
51 – 75	3

Note: At least one space must be van-accessible.

4.4 SHARED PARKING

In the interest of minimizing impacts from impervious land areas optimizing the use and allocation of parking facilities, the planning commission may recommend, and the municipal authority may authorize a reduction in the number of required parking spaces for multiple use developments or for uses that are located near one another, and that have different peak parking demands and operating hours. Shared parking shall be subject to the following standards.

1. ***Location***: All uses that participate in a single shared parking plan shall be located on the same lot or on lots that share a common boundary. The shared parking lot shall be developed and used as though the uses on the lots were a single unit.

2. ***Shared Parking Study***: A shared parking study shall be prepared and submitted to the approving authority along with the development plans for the shared parking. The shared parking study shall clearly establish those uses that will use the shared spaces at different times of the day, week, month and/or year, including seasonal or mode adjustment factors. The study shall:

   a. Be based on the most current Urban Land Institute (Ref. 4) or International Transportation Engineers (Ref. 5) parking study methodology, or other generally accepted methodology;

Recommended Standards

b. Address the size and type of activities, the composition of occupants, and the anticipated peak parking and traffic loads;

c. Provide for a reduction by not more than 50% of the combined parking required for each use;

d. Provide for no reduction in the number of spaces reserved for persons with disabilities;

e. Address the risk of a future change in use that might impact or otherwise affect the use of shared parking, and identify a reserve area to be used if future parking expansion is required; and

f. Be sealed by the engineer of record for the project.

3. ***Agreement for Shared Parking Plan***: A shared parking plan shall be enforced through written agreement. An attested copy of the agreement between the owners of record shall be submitted to the approving authority. Proof of recordation of the agreement shall be presented to the municipality prior to issuance of a zoning permit for the project. The agreement shall:

a. List the names and ownership interest of all parties to the agreement and contain the signatures of those parties;

b. Provide a legal description of the land or parcel(s) whose uses are to be included in the shared parking plan;

c. Include a site plan showing the area of the parking parcel, access drives, and any area that must be maintained in green space for the possible future expansion of the parking area;

d. Provide a legal description of the parking parcel or easement including any access isles and parking reserve areas, and designate and reserve this area for shared parking unencumbered by any conditions that would interfere with its use;

e. Agree and expressly declare the intent for the covenant to run with the land and bind all parties and all successors in interest to the covenant;

f. Assure the continued availability of the spaces for joint use and provide assurance that all spaces will be usable without charge to all participating uses;

Commentary

Table 2-a. Peak Parking Demand Periods

Weekday Peaks	Evening Peaks	Weekend Peaks
Banks Schools Distribution Facilities Factories Offices Professional Services	Hotels Auditoriums Restaurants & Bars Theaters Meeting Halls Residential Dwellings	Religious Institutions Parks Retail Shops Malls

References 4 and 5 provide additional detailed information on shared parking.

Commentary	Recommended Standards
	g. Describe the obligations or each party, including the maintenance responsibility to retain any identified reserved open space (if applicable) for additional parking spaces if the need arises; h. Incorporate the shared parking study by reference; and i. Describe the method by which the covenant shall, if necessary, be revised. 4. ***Change in Use***: Should any of the shared parking uses be changed, or should a representative of the municipality find that any of the conditions described in the approved shared parking study or agreement no longer exist, or if the municipal authority determines that insufficient parking is an issue, the owner shall have the option of submitting a revised shared parking study and an amended shared parking agreement in accordance with the standards of this subsection or of providing the number of spaces required for each use as if computed separately. If the municipal authority determines that the revised shared parking study or agreement does not satisfy parking needs of the proposed uses, the shared parking request shall be denied, and no certificates of occupancy shall be issued until the full number of parking spaces are provided. 5. ***Revocation of Permits***: Failure to comply with the shared parking provisions of this subsection shall constitute a violation of this Code, and shall specifically be cause for revocation of a certificate of occupancy.

References

References

1. McCourt, Ransford S., Parking Generation, 3rd edition, Institute of Transportation Engineers, Washington, D.C., 2004.

2. ADA Accessibility Guidelines for Buildings and Facilities, Federal Register, Vol. 56, No. 144, July 26, 1991.

3. Stover, V.G., and F.J. Koepke, Transportation and Land Development, Institute of Transportation Engineers, Washington, D.C., 2002.

4. Urban Land Institute with Barton-Aschman Associates, Shared Parking, Urban Land Institute, Washington, D.C., 1983.

5. Institute of Transportation Engineers, Shared Parking Planning Guidelines, Institute of Transportation Engineers, Washington, D.C., 1995.

6. Figure 6-100 (I), Article 6, Rock Hill, South Carolina Zoning Ordinance, 2006.
   www.cityofrockhill.com/development/Rock%20Hill%20VIC/

7. American Standard for Nursery Stock, American Nursery & Landscape Association, Washington, D.C., 2004.
   http://www.anla.org/applications/Documents/Docs/ANLAStandard2004.pdf

8. U.S. Environmental Protection Agency,
   www.epa.gov/epaoswer/non-hw/compost/highway/highwy4.pdf